MODEL 品名	DIMENSIONS 尺寸	UNIT:mm

EG150201J2A-VH1

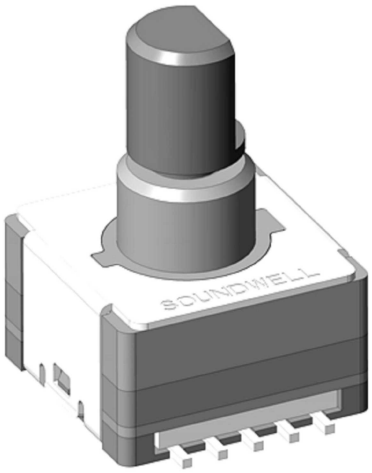

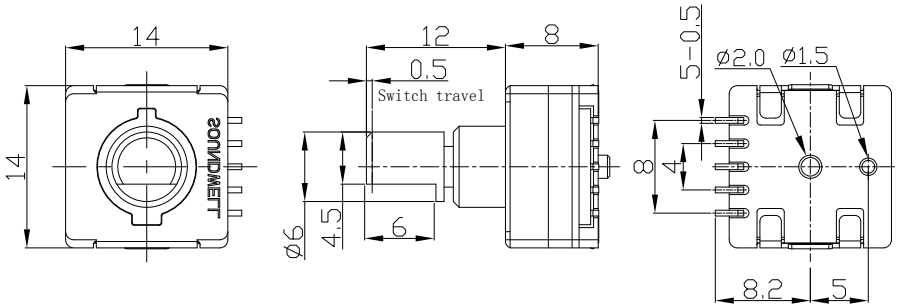

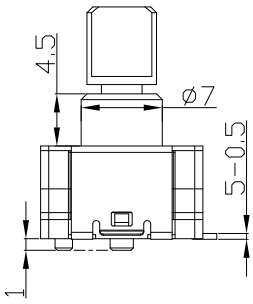

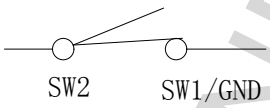

Switch

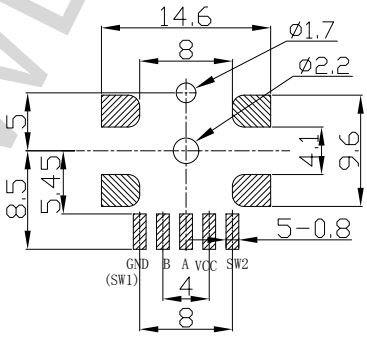

P.C.B. MOUNTING DETAIL

SOUNDWELL

Resolution output signal

RESOLUTION 分解能力	DETENT 定位数	Rotational Direction 旋转方向	SIGNAL 信号	OUTPUT PHASE 输出波形
12 P	24	C.W (顺时针方向)	A (Terminal A-C)	A-C OFF ON
			B (Terminal B-C)	B-C OFF ON
12 P	0	C.W (顺时针方向)	A (Terminal A-C)	A-C OFF ON
			B (Terminal B-C)	B-C OFF ON